Chapter 2
Single-Gene Inheritance

MULTIPLE-CHOICE QUESTIONS

Sections 2.1. and 2.2. (Single gene inheritance, The chromosomal basis of single-gene inheritance patterns)

1. If a plant of genotype *A/a* is selfed, and numerous offspring are scored, what proportion of the progeny is expected to have homozygous genotypes?
A) 0
B) 25%
C) 50%
D) 75%
E) 100%

Answer: C

2. What is the maximum number of heterozygous genotypes that could be produced by monohybrid self?
A) 1
B) 2
C) 3
D) 4
E) 6

Answer: A

3. A plant is heterozygous at three loci. How many different gamete genotypes can it theoretically produce with respect to these three loci?
A) 2
B) 3
C) 4
D) 8
E) 16

Answer: D

4. In mountain rabbits, the *EL-1* gene is located on chromosome 3. Four alleles of this gene have been identified in the population. With respect to *EL-1*, what is the maximum number of genotypes in the progeny of a <u>single cross</u> between two mountain rabbits?
A) 1
B) 2
C) 3

D) 4
E) 6

Answer: D

5. A wild-type strain of haploid yeast is crossed to a mutant strain with phenotype *d*. What phenotypic ratios will be observed in the progeny?
A) all wild type
B) 75% wild type and 25% mutant (*d*)
C) 50% wild type and 50% mutant (*d*)
D) 25% wild type and 75% mutant (*d*)
E) all mutant (*d*)

Answer: C

Section 2.3. (The molecular basis of Mendelian inheritance patterns)

6. Mice (*Mus musculus*) have 40 chromosomes per diploid cell ($2n = 40$). How many double-stranded DNA molecules and how many chromosomes are there in a mouse cell that is in the G2 stage of the cell cycle?
A) 40 DNA molecules and 20 chromosomes
B) 40 DNA molecules and 40 chromosomes
C) 40 DNA molecules and 80 chromosomes
D) 80 DNA molecules and 40 chromosomes
E) 80 DNA molecules and 80 chromosomes

Answer: D

7. A mutation occurs in a germ cell of a pure-breeding, wild-type male mouse prior to DNA replication. The mutation is not corrected, and the cell undergoes DNA replication and a normal meiosis producing four gametes. How many of these gametes will carry the mutation?
A) 1
B) 2
C) 3
D) 4
E) It is impossible to predict.

Answer: B

8. What is the mechanism that ensures Mendel's first law of segregation?
A) formation of chiasmata
B) formation of the kinetochore
C) pairing of homologous chromosomes
D) segregation of homologous chromosomes during meiosis I

E) segregation of sister chromatids during meiosis II

Answer: D

9. A laboratory mouse homozygous for an RFLP marker is mated to a wild mouse that is heterozygous for that marker. One of the heterozygous individuals resulting from this cross is mated back to the wild parent. What proportion of the offspring will have the same RFLP pattern as the original laboratory mouse?
A) none of the offspring
B) 1/4
C) 1/2
D) 3/4
E) all of the offspring

Answer: C

10. The diagram below shows a part of the biochemical pathway responsible for fruit color in peppers (*Caspicum annuum*). Enzyme 1 is responsible for catalyzing the reaction that turns the colorless precursor into yellow pigment, whereas Enzyme 2 catalyzes the step that turns the yellow pigment into red pigment. A breeder crosses a pure-breeding plant that makes yellow peppers to a pure-breeding plant that makes red peppers. What proportion of the offspring will make red peppers?

$$\text{Colorless precursor} \xrightarrow{\text{Enzyme 1}} \text{Yellow pigment} \xrightarrow{\text{Enzyme 2}} \text{Red pigment}$$

A) all of the offspring
B) 3/4
C) 1/2
D) 1/4
E) none of the offspring

Answer: A

11. The wild-type eye color in the fruit fly *Drosophila melanogaster* is dark red, as a result of a mixture of bright red and brown pigments. "Enzyme A" is encoded by the "*a*" gene, and is required to synthesize the bright red pigment. A lack of red pigment results in a somewhat brown eye color. You cross two fruit flies who are heterozygous for a recessive mutation that completely inactivates the "*a*" gene. What proportion of their offspring will have a recessive eye color phenotype?
A) all of the offspring
B) 3/4
C) 1/2
D) 1/4
E) none of the offspring

Answer: D

Section 2.4. (Some genes discovered by observing segregation ratios)

12. In pet rabbits, brown coat color is recessive to black coat color. A black female rabbit gives birth to four black-coated and three brown-coated baby rabbits. What can be deduced about the genotype of the baby rabbits' father?
A) He could be heterozygous black/brown or homozygous brown.
B) He could be heterozygous black/brown or homozygous black.
C) He must be heterozygous black/brown.
D) He must be homozygous black.
E) He must be homozygous brown.

Answer: A

13. "Dumpy" is a commonly used mutant phenotype in the nematode worm *C. elegans*. Two "Dumpy" individuals are crossed to each other, and this cross produces 210 "Dumpy" and 68 wild-type individuals. If one of the "Dumpy" individuals used in this cross was mated with a wild type, what "Dumpy": wild-type ratio would we observe in the offspring?
A) 0:1
B) 1:0
C) 1:1
D) 1:3
E) 3:1

Answer: C

14. A female rabbit of phenotype c' is crossed to a male rabbit with c^{ch}. The F_1 is comprised of five rabbits with a c' phenotype, two with c^{ch} phenotype, and three with c phenotype. Of the phenotypically c rabbits, two are females and are backcrossed to their father. This cross produces only rabbits with c^{ch} phenotype. These results suggest that:
A) c could be dominant or recessive to c'.
B) c is dominant to c', but recessive to c^{ch}.
C) c is dominant to c^{ch}, but recessive to c'.
D) c is dominant to both c' and c^{ch}.
E) c is recessive to both c' and c^{ch}.

Answer: E

15. A plant with small red flowers is crossed to a plant with large white flowers. The resulting F_1 is comprised of 75 plants with small red flowers and 72 plants with small white flowers.
If flower color and flower size are controlled by a single gene each, what can be concluded from these results?
A) Flower color is controlled by a sex-linked gene.

B) Red color and small size are dominant to white color and large size, respectively.
C) Small size is dominant to large size, but we can't determine which color is dominant.
D) We can't determine which color and which size are dominant.
E) White color and small size are dominant to red color and large size.

Answer: C

16. A dominant gene b^+ is responsible for the wild-type body color of *Drosophila*; its recessive allele *b* produces black body color. A testcross of a heterozygous b^+/b female by a black *b*/*b* male gave 52 black and 58 wild-type progeny. If a black female from these progeny were crossed with a wild-type brother, what phenotypic ratios would be expected in their offspring?

A) All males will be wild type, and all females will be black.
B) All progeny will be black.
C) All progeny will be wild type.
D) 75% will be wild type, 25% will be black.
E) 50% will be wild type, 50% will be black.

Answer: E

Section 2.5. (Sex-linked single-gene inheritance patterns)

17. A very common type of red–green colorblindness in humans is caused by a mutation in a gene located on the X chromosome. Knowing that the mutant allele is recessive to the wild type, what is the probability that the son of a woman whose father is colorblind is going to also be colorblind?
A) 0%
B) 25%
C) 50%
D) 75%
E) 100%

Answer: C

18. A phenotypically normal woman is heterozygous for the recessive Mendelian allele causing phenylketonuria, a disease caused by the inability to process phenylalanine in food. She is also heterozygous for a recessive X-linked allele causing red–green colorblindness. What percentage of her eggs will carry the dominant allele that allows normal processing of phenylalanine and the X-linked recessive allele that causes colorblindness?
A) 0%
B) 25%
C) 50%
D) 75%
E) 100%

Answer: B

19. A rare, curly winged mutant of *Drosophila* was found in nature. A mating of this fly with a true-breeding, normal laboratory stock produced progeny in the ratio 1 curly winged to 1 normal (both sexes had the same ratio). All curly winged progeny of this cross, mated with normal progeny of the same cross, again yielded 1 curly winged to 1 normal fly. When mated with one another, the curly winged progeny of the first cross yielded a progeny of 623 curly : 323 normal. This ratio strongly suggests which of the following?

A) Curly and normal are in the 3:1 ratio expected from intercrossing monohybrid genotypes for a recessive mutant allele (curly).
B) Curly and normal are in the 3:1 ratio expected from intercrossing monohybrid genotypes for a dominant mutant allele (curly).
C) The curly winged parent of the curly × curly cross is homozygous.
D) Flies homozygous for the curly allele are lethal and never survive.
E) The gene for curly is sex-linked.

Answer: D

20. A female *Drosophila* with the mutant phenotype *a* is crossed to a male who has the mutant phenotype *b*. In the resulting F_1 generation all females are wild-type and all males have the *a* mutant phenotype. Based on these results, we can conclude that the mode of inheritance of the phenotypes of interest is:

A) autosomal for *a* and X-linked for *b*.
B) dominant for *a* and recessive for *b*.
C) recessive for *a* and dominant for *b*.
D) recessive for both *a* and *b*.
E) X-linked for *a* and autosomal for *b*.

Answer: D

21. A recessive X-linked gene mutation is known to generate premature baldness in males but is without effect in women. If a heterozygous female marries an affected male, what proportion of all their children is expected to be prematurely bald?

A) 1/4
B) 1/8
C) 1/16
D) 1/32
E) 1/216

Answer: A

Section 2.6. (Human pedigree analysis)

22. You have three jars of gumballs. The first jar has 100 white gumballs and 25 green, the second jar has 50 white and 150 blue, and the third jar contains 500 white and 10 red.

If you randomly draw one gumball from each jar, what is the probability for **all white gumballs**?

A) 0.196 or 19.6%
B) 0.109 or 10.9%
C) 0.056 or 5.6%
D) 0.567 or 56.7%
E) This is impossible (0% chance).

Answer: A

23. You have three jars of gumballs. The first jar has 100 white gumballs and 25 green, the second jar has 50 white and 150 blue, and the third jar contains 500 white and 10 red.

If you randomly draw one gumball from each jar, what is the probability for **all white OR all colored gumballs**?

A) 0.199 or 19.9%
B) 0.112 or 11.2%
C) 0.058 or 5.8%
D) 0.589 or 58.9%
E) This is impossible (0% chance).

Answer: A

24. You have three jars of gumballs. The first jar has 100 white gumballs and 25 green, the second jar has 50 white and 150 blue, and the third jar contains 500 white and 10 red.

If you randomly draw one gumball from each jar, what is the probability for **at least one white gumball**?

A) 0.997 or 99.7%
B) 0.85 or 85%
C) 0.69 or 69 %
D) 0.034 or 3.4%
E) This is impossible (0% chance).

Answer: A

25. The following pedigree concerns the autosomal recessive disease phenylketonuria (PKU). The couple marked A and B are contemplating having a baby but are concerned about the baby

having PKU. What is the probability of the first child having PKU? Unless you have evidence to the contrary, assume that a person marrying into the pedigree (i.e., not a descendant of the two parents at the top of the pedigree) is not a carrier. The filled-in individuals have PKU.

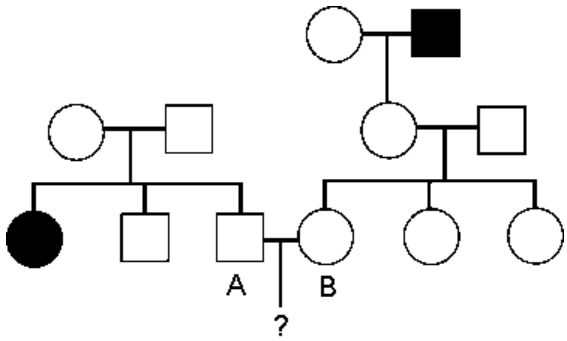

A) 0
B) 1/12
C) 1/4
D) 3/4
E) 9/64

Answer: B

26. The following pedigree depicts the inheritance of a rare hereditary disease affecting muscles.

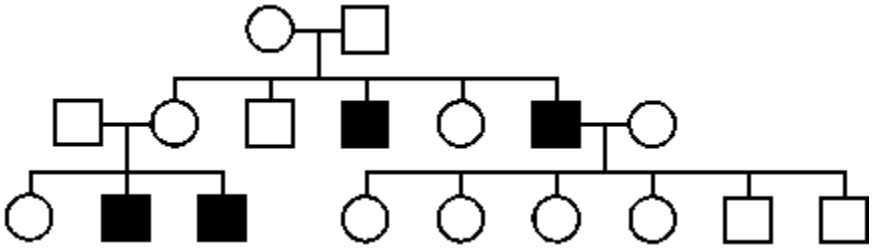

What is the most likely mode of inheritance of this disease?
A) autosomal dominant
B) autosomal recessive
C) X-linked dominant
D) X-linked recessive
E) Y-linked

Answer: D

27. The following pedigree shows the inheritance of attached earlobes (black symbols) and unattached earlobes (white symbol). Both alternative phenotypes are quite common in human populations.

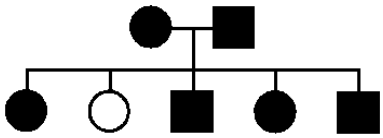

If the phenotypes are determined by alleles of one gene, then attached earlobes are inherited as:
A) an autosomal dominant trait.
B) an autosomal recessive trait.
C) a dominant trait that could be either autosomal or X-linked.
D) a recessive trait that could be either autosomal or X-linked.
E) an X-linked dominant trait.

Answer: A

28. In the human pedigree shown below, black symbols indicate individuals suffering from a rare genetic disease, whereas white symbols represent people who do not have the disease.
Based on the pedigree, what is the most likely mode of inheritance of this rare genetic disease?

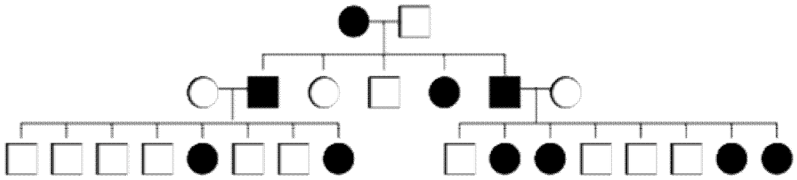

A) autosomal dominant
B) autosomal recessive
C) X-linked dominant
D) X-linked recessive
E) Y-linked

Answer: C

29. The following pedigree shows the inheritance of a mild, but very rare condition in Siberian Husky dogs. If individuals 1 and 2 are crossed, what is the probability that they will produce an affected pup?

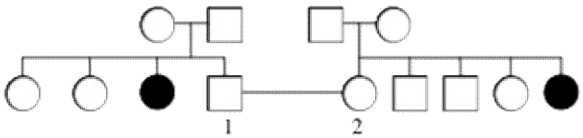

A) 1/36
B) 1/16
C) 4/36
D) 4/16
E) 16/36

Answer: C

30. What is the probability that individual A is a heterozygous with respect to the condition depicted in the pedigree?

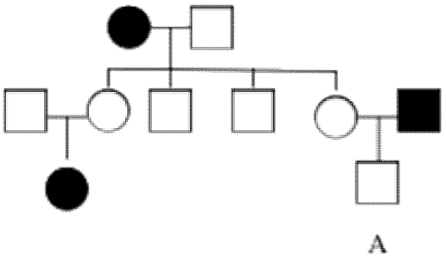

A) 0%
B) 25%
C) 50%
D) 75%
E) 100%

Answer: E

31. What is the most likely mode of inheritance of the exceptionally rare condition represented in the pedigree below, and why?

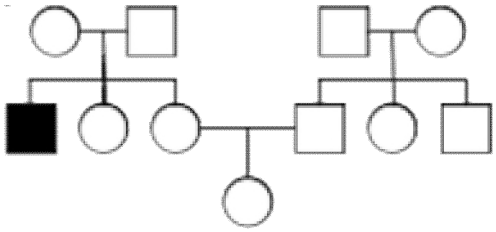

A) impossible to determine, because the condition is so rare
B) recessive, because it is only present in one generation, but we do not have enough information to tell whether it's X-linked or autosomal
C) recessive, because unaffected parents have an unaffected child, and autosomal, because there are more autosomes than there are X chromosomes
D) X-linked recessive, because this would require the smallest number of rare alleles in the pedigree
E) X-linked recessive, because it only affects a male, and his parents are unaffected

Answer: D

32. A couple is both heterozygous for the autosomal recessive disease cystic fibrosis (CF). What is the probability that their first child will either be a boy or have CF?
A) 6/8
B) 5/8
C) 3/8
D) 2/8
E) 1/8

Answer: B

33. Cystic fibrosis is an autosomal recessive condition. If the parents of a boy with cystic fibrosis have two more children, what is the probability that both of these children will be unaffected?
A) 1/16
B) 3/16
C) 4/16
D) 9/16
E) 16/16

Answer: D

MATCHING QUESTIONS

34. Below are a list of crosses and a list of progeny phenotypic ratios. Match each cross with the expected progeny phenotypic ratio. Write the letter corresponding to the progeny phenotypic ratio in the space provided on the right of each cross. Each progeny ratio may be used multiple times. If a cross has no corresponding progeny ratio, write an "X" in the space provided.

<u>List of crosses</u>

1)	monohybrid self (diploids)	_d__
2)	monohybrid testcross (diploids)	–a—
3)	mutant × wild-type in a haploid	–a—
4)	homozygous dominant × homozygous recessive (diploid)	–e—
5)	mutant 1 × mutant 2 in a haploid	–a—

<u>List of phenotypic ratios observed in the progeny</u>

a) 1:1
b) 1:2:1
c) 2:1:1
d) 3:1
e) 1:0

35. Four patterns of inheritance and four pedigrees are shown below. Assume that individuals marrying into the family are homozygous for the wild-type allele. Match each of the inheritance patterns with a pedigree. If there is no pedigree to match an inheritance pattern, write "X" beside that inheritance pattern.

A) autosomal dominant _____III____
B) autosomal recessive _____II____
C) X-linked dominant _____X___
D) X-linked recessive _____IV____
E) Y-linked _____I___

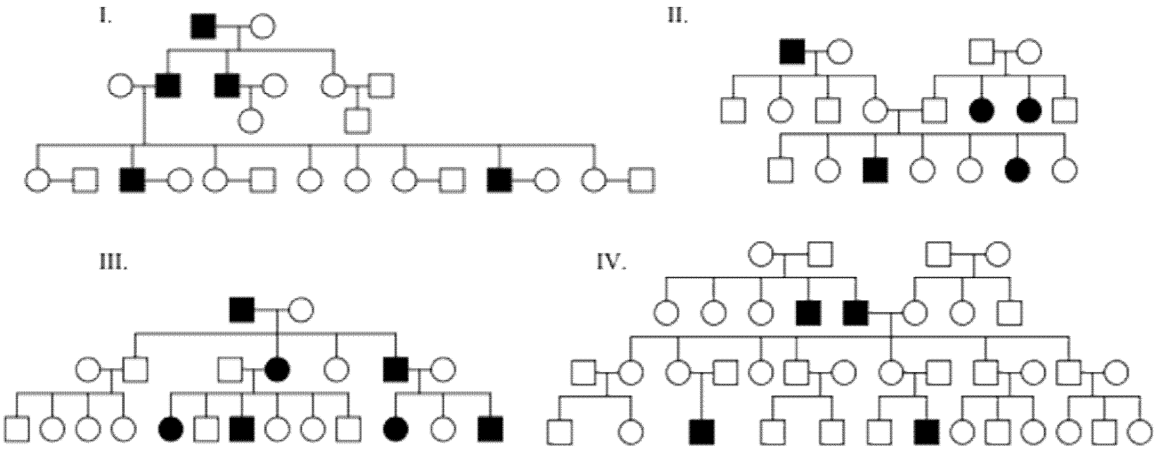

OPEN-ENDED QUESTIONS

Sections 2.1 and 2.2 (Single gene inheritance, The chromosomal basis of single-gene inheritance patterns)

36. Mendel studied the inheritance of phenotypic characters determined by alleles of seven different genes. It is an interesting coincidence that the pea plant has seven pairs of chromosomes (n = 7). What is the probability that, by chance, Mendel's seven genes would each be located on a different chromosome? You may assume that the pea's chromosomes are all the same size.
Answer: $6!/7^6 = 6.12 * 10^{-3}$
Take each gene in turn. The probability is 1 that the first gene falls on a chromosome. The probability that the second gene falls on any of the remaining six chromosomes is 6/7, the next is 5/7, etc. The overall probability is the product of all these.

37. In Labrador retrievers, black color coat (*B/–*) is dominant to brown color coat (*b/b*). A breeder crosses two black individuals who have previously produced some brown puppies. If the cross produces six puppies:
a) what is the probability that the first born will be brown?
b) what is the probability that four of them will be brown and two will be black?
c) what is the probability that at least one of them will be brown?

Answer: a) Both parents must be heterozygotes *B/b* because they have previously produced brown puppies. The probability that they produce a brown puppy is therefore ¼.
b) Each pup has ¾ chance of being black and ¼ chance of being brown. The order in which the brown and black puppies are born does not matter, so there are 15 different permutations of 4 brown + 2 black (5!). Hence, the probability is:
15[(1/4)(1/4)(1/4)(1/4)(3/4)(3/4)] = 135/4096 = 3.3%
c) In this case, the only instance that does not satisfy the condition is the case in which all puppies are black. The probability of this event is $(3/4)^6$ = 729/4096 = 17.8%. Therefore, the probability of obtaining at least one brown puppy is 1 – (729/4096) = 82.2%.

38. In a particular species of plants, flower color is dimorphic: some individuals have red flowers, whereas others have yellow flowers. If flower color is controlled by a single gene with two alleles (c^{red} and c^{yellow}):
a) what would be the simplest way to determine which allele is dominant?
b) what will be the genotypic ratio in the offspring of a cross between a monohybrid and a pure-breeding individual?

Answer: a) Crossing a pure-breeding red to a pure-breeding yellow individual, and assessing the phenotype of the monohybrid produced. If it makes red flowers, then c^{red} is dominant; if it makes yellow flowers, then c^{yellow} is dominant.
b) 1:1; half of the offspring will be heterozygous, and half will be homozygous like the pure-breeding parent.

39. Suppose that red flower color (*RR* or *Rr*) is dominant to white flower color (*rr*) in a petunia. A friend has a petunia plant with red flowers and wants to determine whether the plant is *RR* or *Rr*.
a) What cross could you perform to help your friend determine the genotype of his petunia plant?
b) How will this cross help you determine the genotype of your friend's red-flowered petunia? That is, how will the results from this cross differ if the red-flowered petunia is *RR* versus *Rr*?

Answer: a) Perform a testcross (test the red petunia to a genotypically rr petunia).
b) You will observe different segregation in the testcross progeny, depending on the genotype of the red petunia. If the red petunia is *RR*, then all testcross progeny will be red; if the red petunia is *Rr*, then ½ of the testcross progeny will be red (*Rr*) and ½ will be white (*rr*).

40. Suppose that a single gene controls fruit color in mango. Yellow fruit (*Y*) is dominant to red fruit (*y*). Suppose a true-breeding yellow mango plant was crossed with a red-fruited plant, and the resulting F_1 was selfed. The F_2 segregated as expected. If one of the yellow-fruited plants was randomly selected and selfed, what is the probability that its progeny would segregate for fruit color? Explain your logic.

Answer: The F_2 consists of ¼ *YY*: ½ *Yy* : ¼ *yy*. Thus, the yellow-fruited plant that was randomly picked could be either *YY* or *Yy*. There is a 1/3 chance that it was *YY* and 2/3 chance that it was *Yy*. If a *YY* plant was selected and selfed, the progeny would not segregate for fruit color. If a *Yy* plant was selected, the progeny would segregate for fruit color.

Section 2.3. (The molecular basis of Mendelian inheritance patterns)

41. The wild-type flower color of a particular species of plant is blue. The diagram below shows a simplified version of the biochemical pathways responsible for the synthesis of the blue pigment. Suppose that gene "*A*" codes for Enzyme A and gene "*B*" for Enzyme B.
A friend provides you with a pure-breeding plant that makes colorless (white) flowers. What genetic experiment(s) could you perform to determine whether your plant lacks Enzyme A or Enzyme B? (Suppose that you have access to any pure-breeding lines that you need.)

$$\text{Colorless precursor 1} \xrightarrow{\text{Enzyme A}} \text{Colorless precursor 2} \xrightarrow{\text{Enzyme B}} \text{Blue pigment}$$

Answer: The "unknown" white mutant can be crossed to a pure-breeding mutant that lacks Enzyme 2 (genotype *b/b*); if the "unknown" mutant lacks Enzyme 2, then the entire F_1 should make only white (colorless) flowers, but if the "unknown" mutant lacks Enzyme 1, then the F_1 should inherit a functioning *A* allele from the b/b parent and a functioning *B* allele from the "unknown" (*a/a*) parent, and therefore make blue flowers.
ALTERNATIVELY: A heterozygous *A/a* can be produced by crossing a wild type to a pure line that lacks Enzyme A. This heterozygous can be crossed to the "unknown" mutant; if a 1:1 of blue:white is observed in the offspring, then our "unknown" mutant most likely lacks Enzyme A and is therefore *a/a*.

42. Yellow leaves on a plant can be caused by genetic mutations, viruses, or unfavorable environmental conditions. Suppose you find a plant that has yellow leaves, and you want to determine if the cause of the phenotype is a genetic mutation or an environmental stress. Design an experiment to differentiate between the different possibilities.

Answer: Cross the yellow plant with a normal plant. Self the resulting F_1 and look for a consistent, predictable segregation pattern. For example, the presence of a 3 green :1 yellow segregation ratio would suggest that the yellow phenotype was caused by a recessive mutation.

Section 2.4. (Some genes discovered by observing segregation ratios)

43. Suppose that the length of a duck's tail is determined by a single autosomal gene with two alleles: *L* (long tail) and *l* (short tail). When a female duck with a long tail was backcrossed to her father, she produced three ducklings with a long tail and three with a short tail.

a) What are the possible genotypes of the female duck and of her father?
b) What is the most likely genotype of the female duck's father? (Justify your answer using probabilities).

Answer: a) The presence of ducklings with the recessive phenotype among the offspring indicates that both the mother (the "female duck") and the male used in the cross carry the recessive *l* allele. The mother must be *L/l* as she has a long tail phenotype. The father could be *L/l* or *l/l*.

b) *l/l* is more likely. The probability of the cross *L/l* × *l/l* producing a 1:1 ratio within an offspring of six ducklings is $[(1/2)^6]*10$ = ~15%, whereas the probability that the cross *L/l* × *L/l* produce a 1:1 ratio in an offspring of six ducklings is $[(3/4)^3(1/4)^3]*10$ = ~6.6%.

44. Loppins are fictitious (but useful) diploid invertebrates that produce large offspring and normally have long antennae. Short antennae mutants also exist. Unfortunately for the geneticists working on these organisms, the males' antennae don't fully develop until the loppin equivalence of "middle age." A female with short antennae is crossed to a young male, and all the females in their offspring have the short antennae mutant phenotype. A subset of these F_1 females are crossed to a middle-aged male with short antennae, and all the females produced by these crosses have short antennae. However, all the crosses between the F_1 females and their brothers produce both short antennae and long antennae loppins in a ratio of about 3:1. How can these results be explained? Provide the genotypes of as many individuals as possible.

Answer: The 3:1 ratio obtained in the cross between brothers and sisters suggests that short antennae (*S*) is dominant to long antennae (*s*), and that the F_1 females and their brothers are heterozygous (*S/s*). The young male used in the original cross is probably homozygous for the long antennae allele (*s/s*); the middle aged male with short antennae is probably homozygous (*S/S*, because all the progenies have short antennae). The cross between F_1 females and the middle aged male produces about 50% *S/s* and 50% *S/S* individuals; the cross between the F_1 females and their brothers produces about 25% *S/S*, 25% *s/s* and 50% *S/s*, hence the observed phenotypic ratios.

Section 2.5. (Sex-linked single-gene inheritance patterns)

45. Wild-type *Drosophila melanogaster* have a brown/grey body color. Mutants exist that have a yellow body color. Several crosses were performed between phenotypically wild type and yellow individuals, and the results of each cross are reported in the table below.
Deduce the mode of inheritance of the yellow body phenotype and genotypes of the parents and offspring in the following crosses.

			Progeny			
			Females		Males	
Parents			wild type	yellow	wild type	yellow
Female		Male				
a) wild type	*	yellow	198	0	203	0
b) yellow	*	yellow	0	156	0	145
c) yellow	*	wild type	210	0	0	190
d) wild type	*	yellow	102	98	99	97

Answer: All the offspring in cross (a) are wild type; yellow is recessive to wild type;

let's define *A* as the dominant wild-type allele and a as the yellow mutant recessive. In all the progenies we have roughly equal numbers of males and females, which is what is expected. However, there is some sex bias and reciprocal crosses give different results: all the sons of yellow females (homozygous *a/a*) are yellow; all the daughters of wild-type males are wild type; this suggests sex-linkage.
In fact:

			Progeny			
			Females		Males	
Parents			wild type	yellow	wild type	yellow
Female		Male				
a) X^A/X^A	*	X^a/Y	X^A/X^a	X^a/X^a	X^A/Y	not possible
expected ratio			all WT, as observed		all WT, as observed	
b) X^a/X^a	*	X^a/Y	not possible	X^a/X^a	not possible	X^a/Y
expected ratio			all yellow, as observed		all yellow, as observed	
c) X^a/X^a	*	X^A/Y	X^A/X^a	not possible	not possible	X^a/Y
expected ratio			all WT, as observed		all yellow, as observed	
d) X^A/X^a	*	X^a/Y	X^A/X^a	X^a/X^a	X^A/Y	X^a/Y
expected ratio			1:1, as observed		1:1, as observed	

46. The black and yellow pigments in the coats of cats are controlled by an X-linked pair of alleles. Females heterozygous for these alleles have areas of black and areas of yellow in their coat (called *tortoise-shell*, or *calico* if there are also patches of white hair).

a) A calico cat has a litter of eight kittens: one yellow male, two black males, two yellow females, and three calico females. Assuming there is a single father for the litter, what is his probable color?
b) A yellow cat has a litter of four kittens: one yellow and three calico. Assuming there is a single father for the litter, what is the probable sex of the yellow kitten?
c) How would you prove that XO cats are phenotypically female? What female kitten colors (with respect to yellow, calico, and black) would you look for in which types of parental color crosses?

Answer: a) Yellow (genotype: *yw;Y* chromosome) where *yw* = yellow; yw^+ = black
b) Male. Since the father must be black (genotype yw^+;*Y* chromosome), the only true yellow progeny cannot have received a color gene from the father. It must be male, and must have received its one *X* chromosome from its mother.
c) Look for female kittens that fail to express an allele they should have inherited from their mothers: black female kittens from yellow mothers or yellow female kittens from black mothers. These kittens should have an *X* chromosome from their fathers as usual; the fact that they show no alleles from their mothers may suggest they developed from eggs without an *X* chromosome and therefore that *XO* is female. Similarly, look for female kittens that fail to express a color that should have been inherited from their father. Female progeny of yellow tom cats should be either yellow or calico and of black tom cats, either black or

calico, depending on the allele inherited from the mother. A black daughter of a yellow tom cat might come from a sperm lacking any sex chromosome. Chromosomal checks would be required on these unexpected progeny.

47. A young woman is worried about having a child because her mother's only sister had a son with Duchenne muscular dystrophy (DMD). The young woman has no brothers or sisters. (DMD is a rare X-linked recessive disorder.)
a) Draw the relevant parts of the pedigree of the family described above. (Be sure to include the grandmother, the three women mentioned, and all their mates.)
b) State the most likely genotype of everyone in the pedigree.
c) Calculate the probability that the young woman's first child will have DMD.

Answer: a) pedigree and b) genotypes

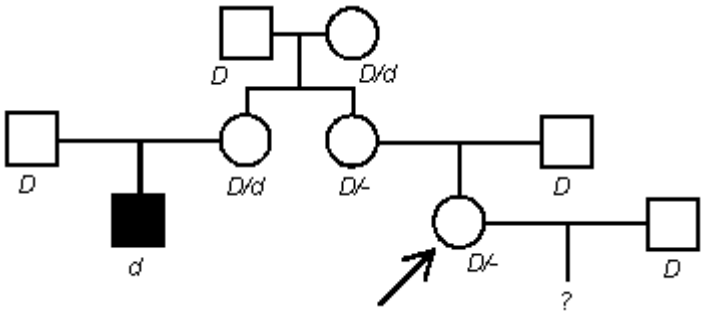

c) The grandmother must have been *D/d*. There is a 1/2 chance that the mother is *D/d* and, if so, a further 1/2 chance that the woman herself is *D/d*. If she is, 1/2 of her sons will have DMD. Since the probability of a son is also 1/2, the overall probability is 1/2 * 1/2 * 1/2 * 1/2 = 1/16.

Section 2.6. (Human pedigree analysis)

48. a) In families with four children, what proportion of the families will have at least one boy?
b) In families with two girls and one boy, what fraction of the families will have the boy as the second child?
c) In families with four children, what fraction of the families will have the gender order male-female-female-male?

Answer: a) 0.9375, since 1 – Prob. of 4 girls, or $1 - (.5)^4 = 1 - 0.0625$. The frequency can be calculated more laboriously by expanding the binomial $(p + q)^4 = p^4 + 4p^3q + 6p^2q^2 + 4pq^3 + q^4$ and calculating that 15/16 (0.9375) of the distribution has one boy.
b) 1/3, because the frequencies of MFF, FMF, and FFM families are equal.
c) Of four-child families, 6/16 have two boys and two girls; only 1/6 of such families will have the birth order MFFM. Therefore, 1/16 will have that particular birth order. The same answer can be derived as $(0.5)^4$.

49. A man whose mother had cystic fibrosis (autosomal recessive) marries a phenotypically normal woman from outside the family, and the couple considers having a child.
a) If the frequency of cystic fibrosis heterozygotes (carriers) in the general population is 1 in 25, what is the chance that the first child will have cystic fibrosis?
b) If the first child does have cystic fibrosis, what is the probability that the second child will be normal?

Answer: a) The man must be a heterozygote, *C/c*. The probability that his wife is *C/c* is 1/25, and if they are both *C/c* the probability of having an affected child is 1/4. Overall, the probability is (1/25)(1/4) = 1/100.
b) The first child shows that both parents must have been *C/c*, so the probability that the next child will be normal is 3/4.

50. Consider the following pedigree of a rare autosomal recessive disease. Assume all people marrying into the pedigree do not carry the abnormal allele.

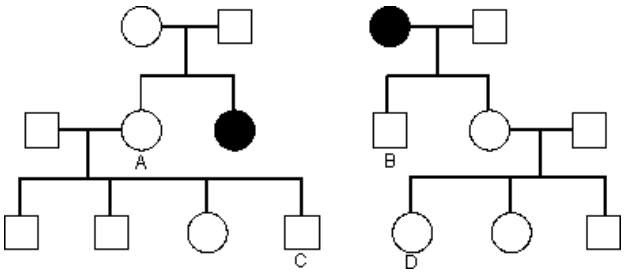

a) If individuals A and B have a child, what is the probability that the child will have the disease?
b) If individuals C and D have a child, what is the probability that the child will have the disease?
c) If the first child of C * D is normal, what is the probability that their second child will have the disease?
d) If the first child of C * D has the disease, what is the probability that their second child will have the disease?

Answer: a) Choosing *M* for unaffected and m for the disorder, male B must be *M/m*, and female A has a 2/3 chance of being *M/m*. The overall chance of an affected child is 1 * 2/3 * 1/4 = 1/6.
b) If C's mother A is heterozygous, C stands a 1/2 chance of being heterozygous. D's mother must be heterozygous, and D stands a 1/2 chance of inheriting that heterozygosity. The overall chance of an affected child is 2/3 * 1/2 * 1 * 1/2 * 1/4 = 1/24.
c) The probability is still 1/24.
d) Now that we know individuals C and D must both be *M/m*, the chance of the second child being *m/m* is 1/4.

51. Below is the pedigree of a family where some individuals are affected with a mild condition of the skin.

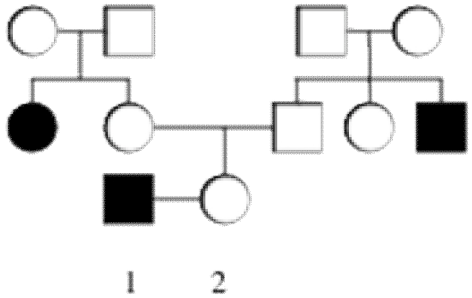

a) Based on the pedigree, what is the most likely mode of inheritance of this condition, and why?
b) Indicate the respective genotypes of each individual represented. For individuals who could have two or more genotypes, calculate the relative probability of each possible genotype.
c) What is the probability that individuals 1 and 2 will have an affected daughter?

Answer: a) Autosomal recessive; it is the only mode of inheritance whereby two unaffected parents can have an affected daughter (as is the case for I-1 and I-2 and their first child).

b) *A* = WT; a = mild condition
The affected individuals are a/a; all four individuals in generation I are *A/a*; the unaffected people in generation II have a probability of 2/3 of being *A/a* and 1/3 of being *A/A*; and for individual "2" a few more calculations are required:
- if both her parents are *A/A* (probability of 1/9), then she's *A/A*;
- if one of her parents is *A/A* and the other *A/a* (probability of 4/9), then she has a 50% chance of being *A/A* and 50% chance of being *A/a*;
- if both of her parents are carriers (probability of 4/9), then she has a 2/3 chance of being *A/a* and 1/3 chance of being *A/A*.
- Overall, her probability of being *A/A* is (1/9) + (1/2)(4/9) + (4/9)(1/3) = 13/27 and her probability of being *A/a* is (1/2)(4/9) + (4/9)(2/3) = 14/27

c) (14/27)(1/2) = 7/27

52. In the late 1800s, Mendel defined two fundamental laws of transmission genetics; these were subsequently used to establish chromosome theory as scientists examined visible chromosomes in meiotic cells. Define these two laws, and diagram where in the process of meiosis these two processes actually occur.

Answer: Students can diagram meiosis, which is a healthy review of their understanding of the process, and identify within this process the observations of Mendel (working without knowledge of meiosis). Mendel's first law focused upon the segregation of genetic determinants during meiosis. This is essentially the anaphase I-mediated process of reducing ploidy during meiosis I. Mendel's second law, independent assortment, occurs during meiosis I as homologous chromosomes are lined up and assorted to meiocytes. This process is distinctly random in each meiotic process and is key to genetic diversity within gamete production.